Hardened, Compact and Fast: Adaptive Flight Control Actuators for Guided Hard-Launched Munitions

Dr. Ron Barrett
Professor of Aerospace Engineering
Adaptive Aerostructures Laboratory Director

Ms. Lauren Schumacher
Self Graduate Fellow & Ph.D. Candidate

Aerospace Engineering Department
The University of Kansas, Lawrence, Kansas

NDIA 62nd Annual Fuze Conference
13 – 15 May 2019
Buffalo, NY

Paper No: 21779

Outline:

I. Motivation

II. Background

III. New Classes of Adaptive Actuators

IV. Enabled Systems

V. Future Work

Unlimited Distribution
Unclassified

Motivation:

- ***New Enabling Technologies***
  - ***lower caliber rounds via MASS designs...***
  - ***new missions...***
- ***Lines blurred: Missiles ⟷ Munitions***
- ***Large Cost Savings Possible***

Unlimited Distribution
Unclassified

Brief Guided Round History

Unlimited Distribution

Unclassified

Flight Control Technologies

Electromagnetic *tens to hundreds of components*

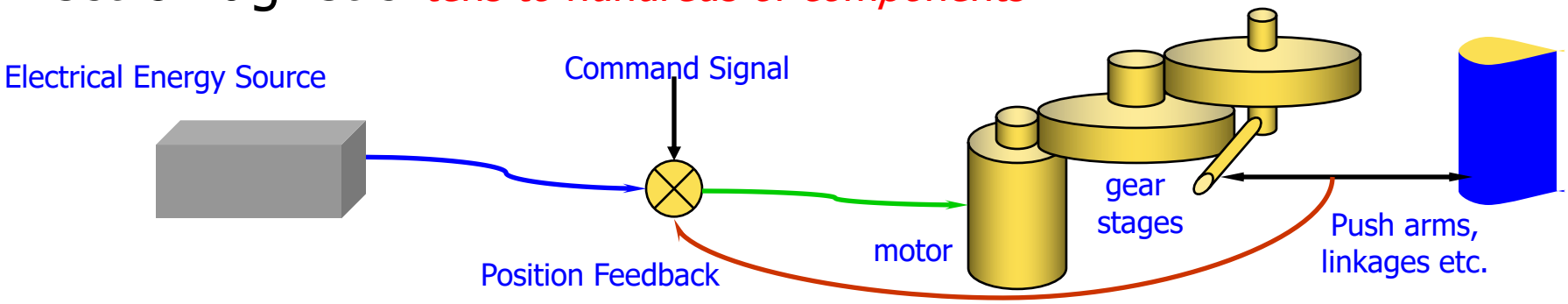

Adaptive

solid state, rugged

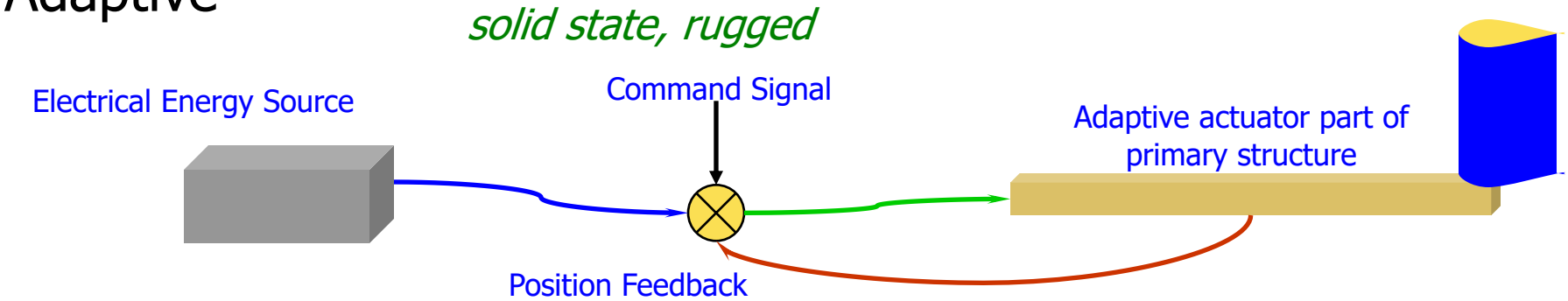

Unlimited Distribution
Unclassified

Low Caliber Flight Control Actuator Needs…

- Setback tolerance: 5,000 - 100,000g's
- Balloting, setforward, ringing impervious
- Compatible with supersonic control effectors
- Not affected by atmospherics (rain, dust, dirt, snow, etc.)
- 20 yr storage life
- -40 to +145° F
- Fully proportional deflections
- Lightweight (<1g), Low Volume (<1cc), Low Power (95+% electrical-to-mechanical conversion efficiency)
- High bandwidth (>200 Hz)

Unlimited Distribution
Unclassified

Overview of Programs with Lineage to Flying Adaptive UAVs

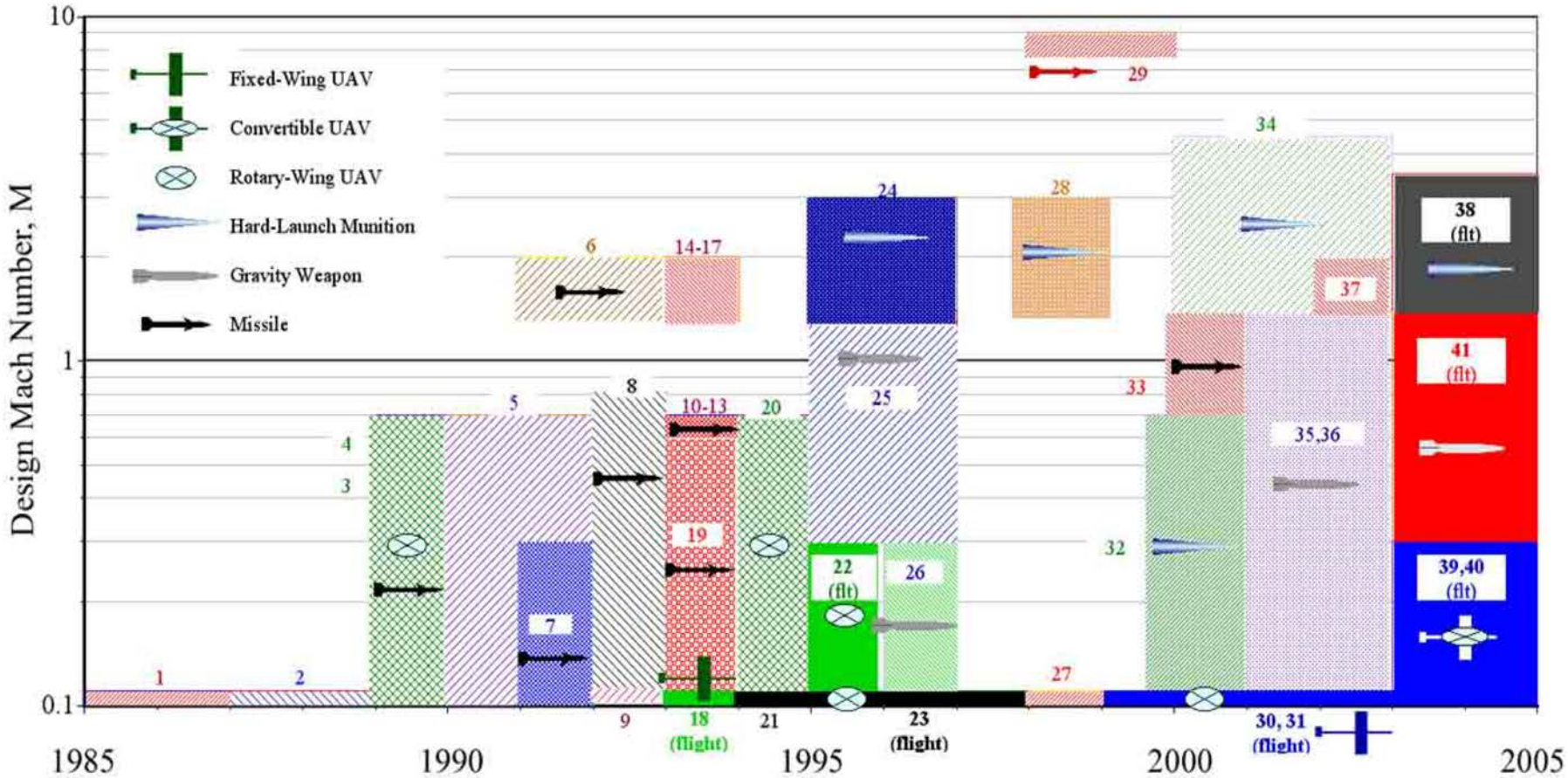

Unlimited Distribution
Unclassified

Guiding Lower Caliber Rounds… More History

Barrel-Launched Adaptive Munition (BLAM) Program 1995 - '97

USAF/AFRL-MNAV

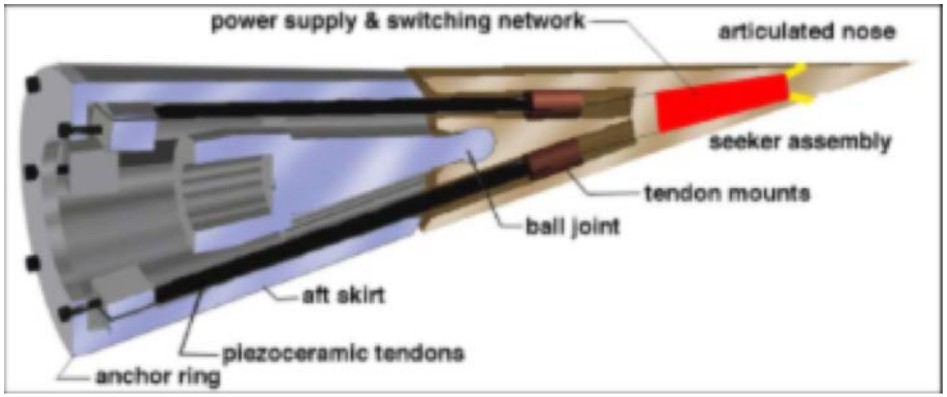

- Aerial Gunnery (20 - 105mm)
- Extend Range w/2g maneuver
- (Eglin AFB tests '97)

(Mach 3.3 tests '96-'97)

- Increase hit probability
- Increase probability of a kill given a hit
- Reduce total gun system weight fraction

Unlimited Distribution
Unclassified

The First MAV… Driving Adaptive FCS

Conventional Electromagnetic

+/- 90° Deflections @ 3 Hz

Adaptive Stabilators

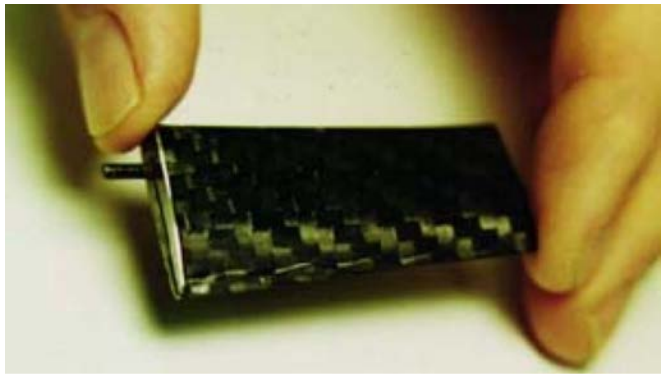

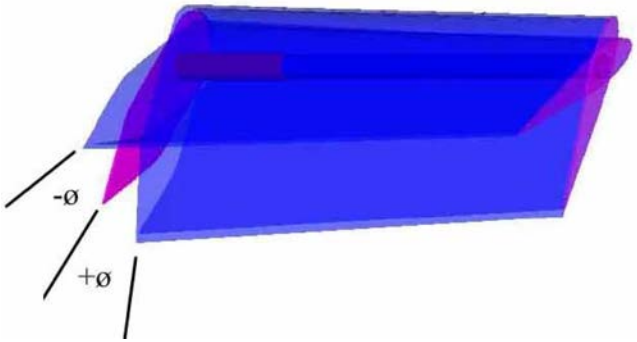

+/-11° Deflections @ >47Hz

Unlimited Distribution

Unclassified

Advanced MAVs:

Driving the need for Adaptive Actuators -- faster, lighter, stronger

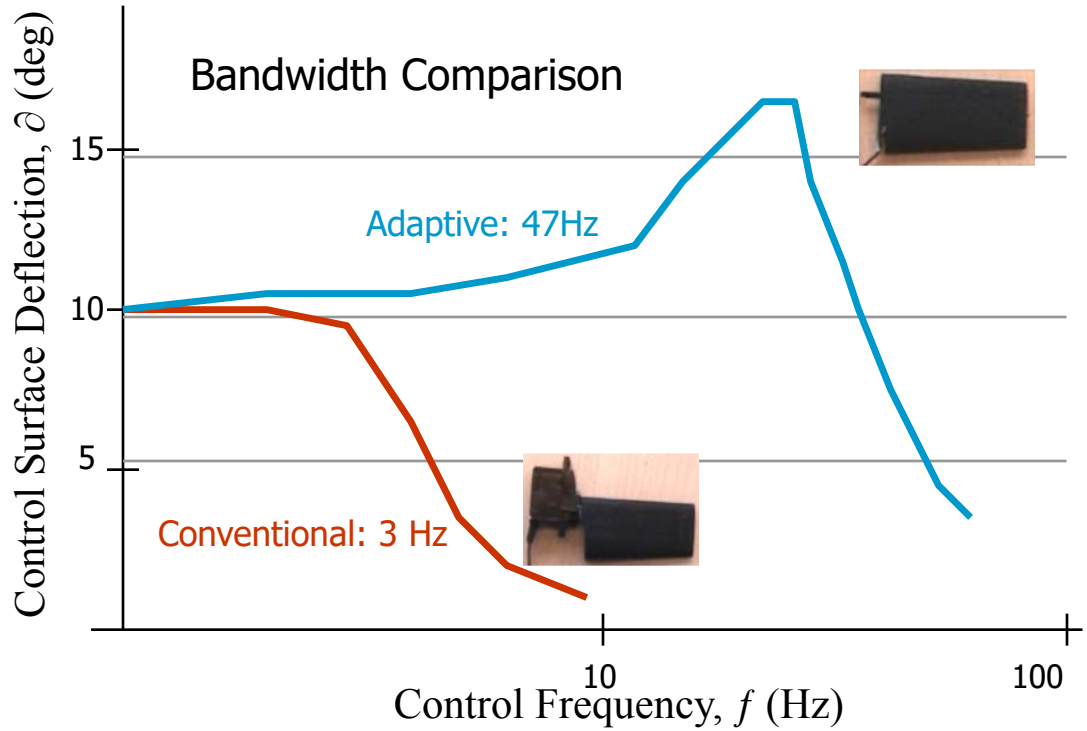

Adaptive Surfaces vs. Conventional Servos

- 96% reduction in power consumption
- 16x increase in bandwidth
- 99.2% decrease in slop
- Order of magnitude reduction in part count
- 12% OWE savings

Unlimited Distribution
Unclassified

Guiding Small Arms Rounds… More History

Range-Extended Adaptive Munition (REAM) IRAD

BAT-Lutronix Corp. developed supersonic piezoelectric FCS actuators

Max Power Consumption: 28 mW
Nominal Power Consumption: 3.5 mW
Static Power Consumption: < 1μW
Design Mach Range: 0.8 - 4.5, STP
Design Accelerations: 25k g's

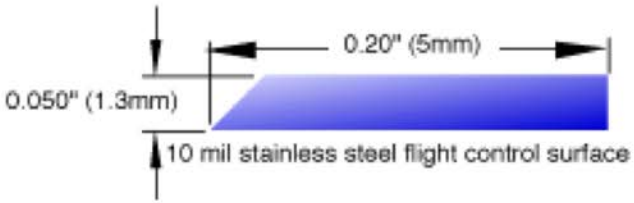

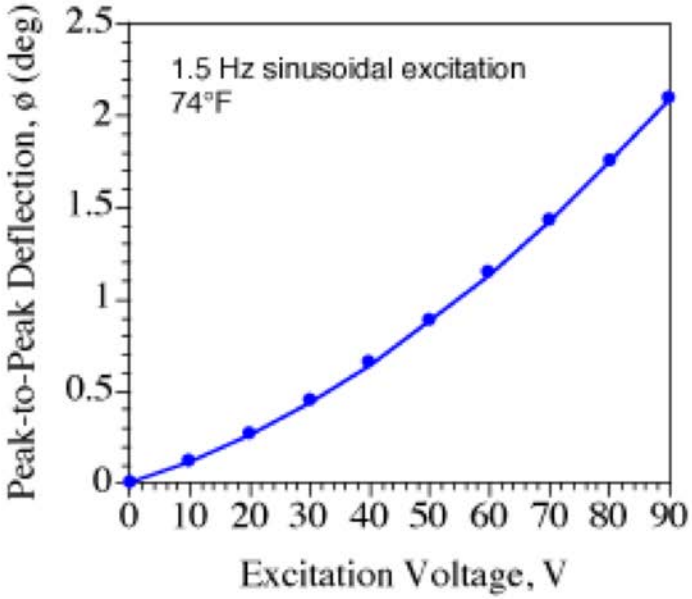

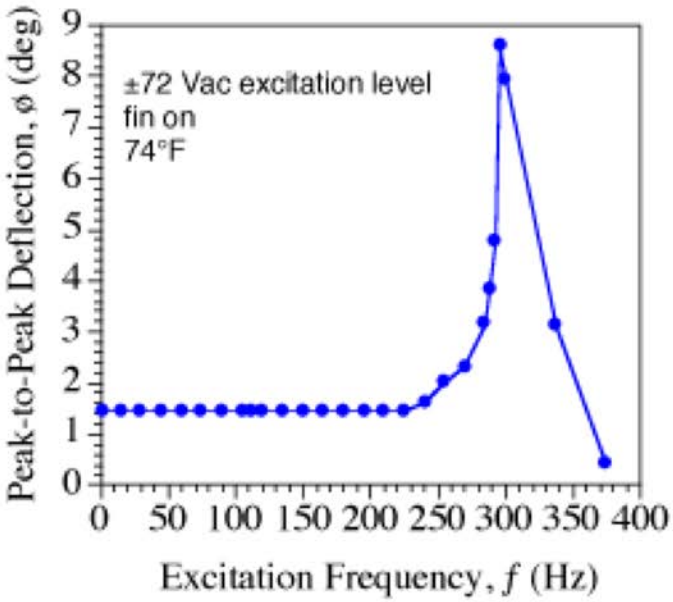

Unlimited Distribution
Unclassified

Other Adaptive FCS Efforts

Rabinovitch & Vinson 2000 - present

again... low authority
can't survive balloting, setback unsteady aero...

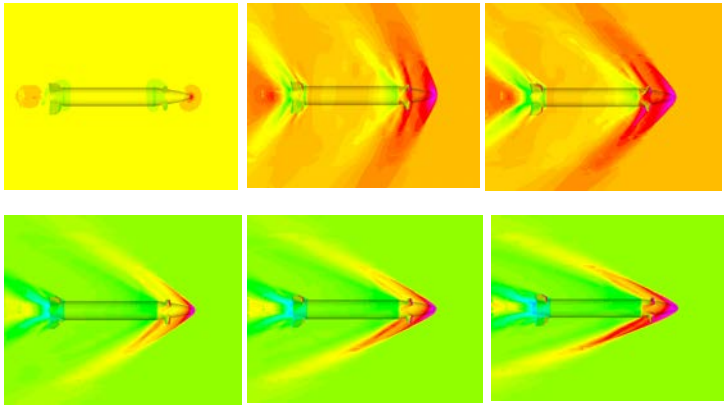

Now Where???

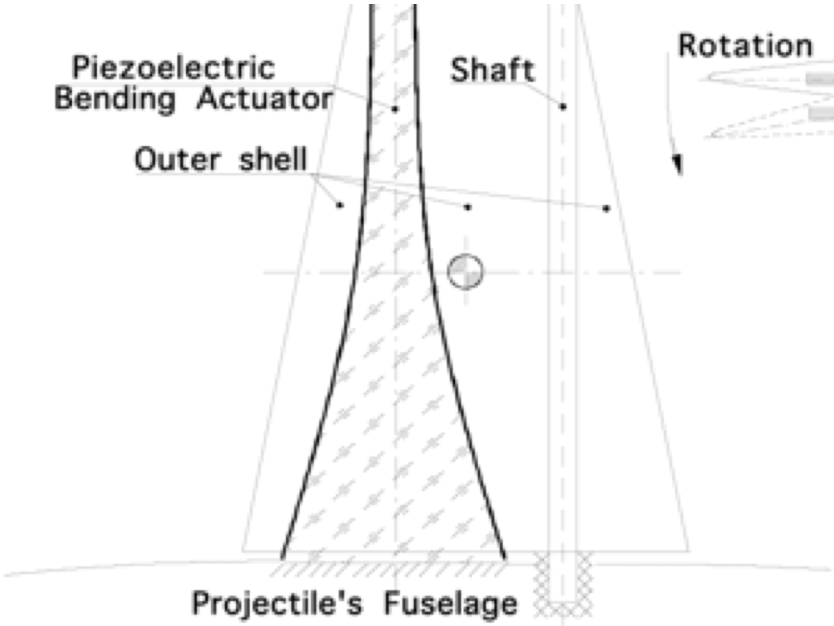

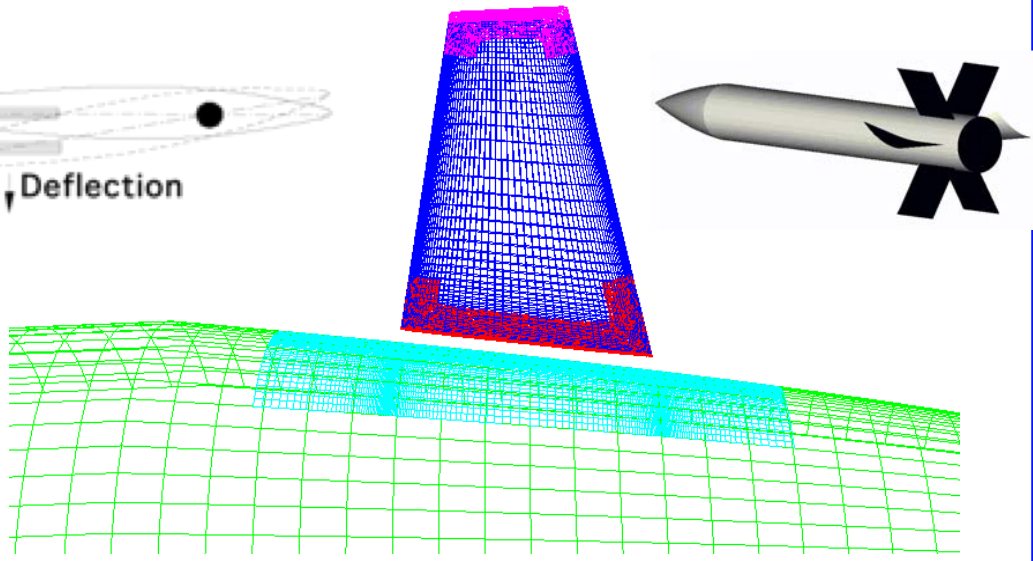

Unlimited Distribution
Unclassified

Guiding Hard-Launched Rounds… The Epiphany!

Discoveries from Europe…

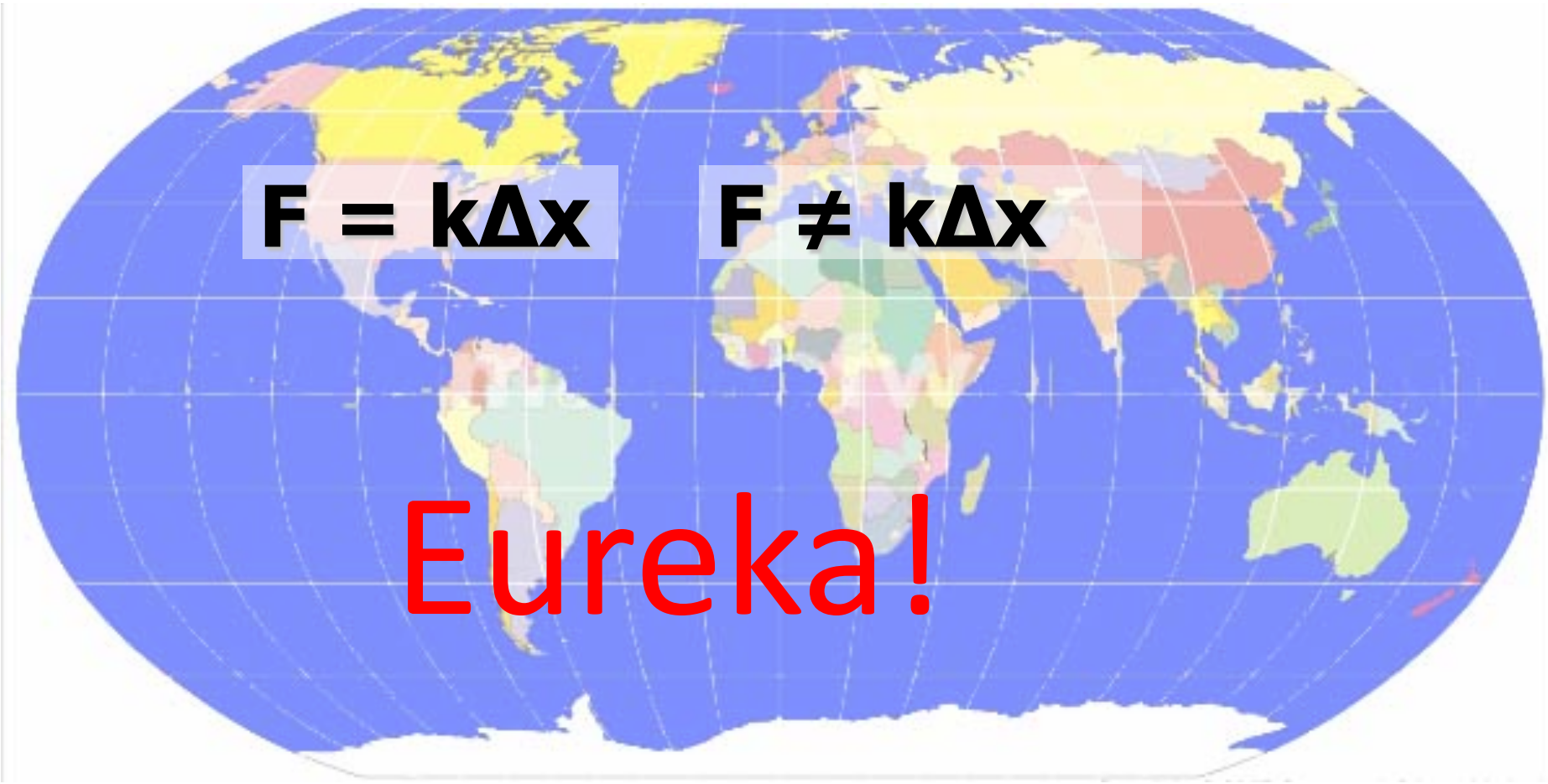

Unlimited Distribution

Unclassified

Guiding Hard-Launched Rounds… The Epiphany!

Increasing Moment-Deflection Design Space

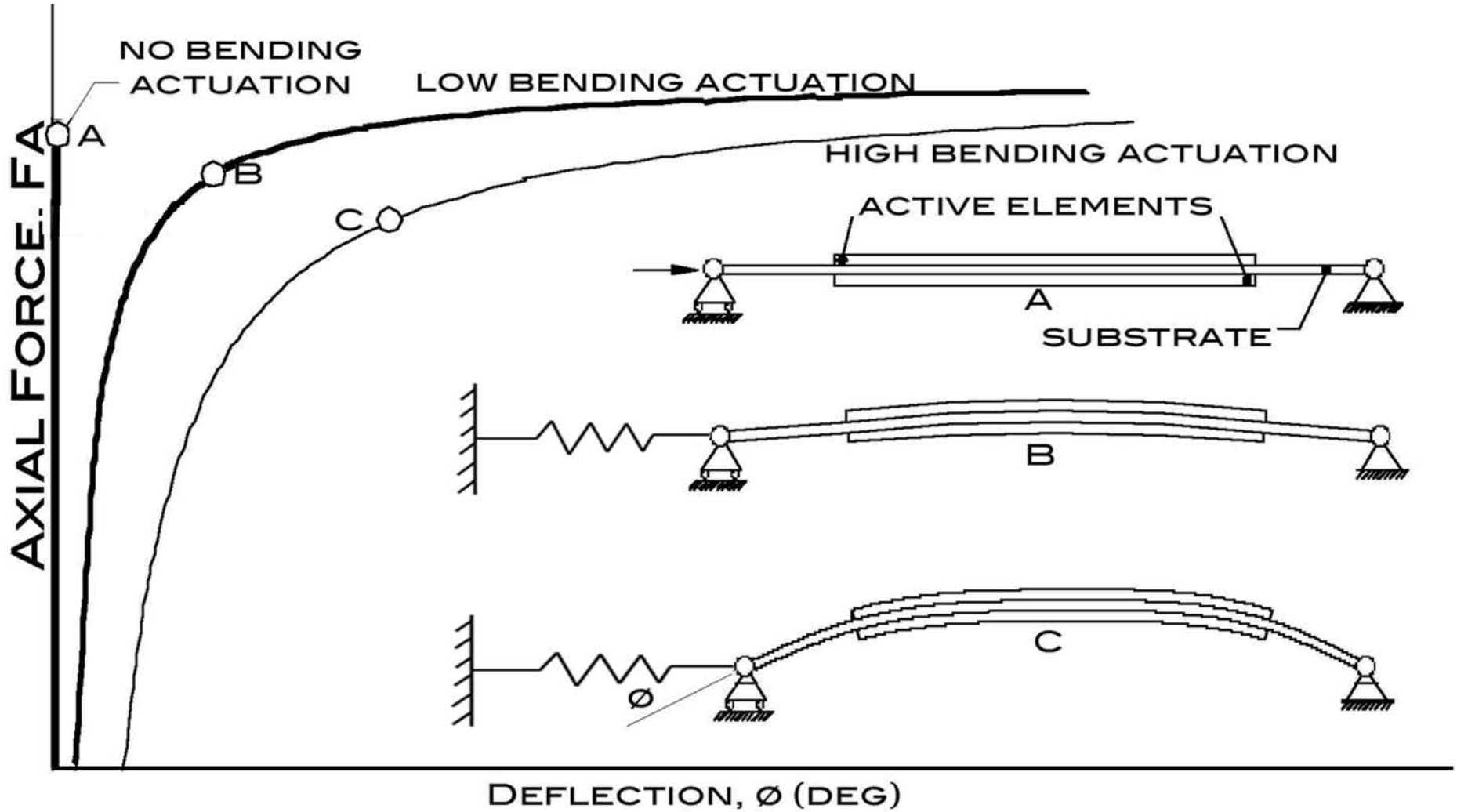

Unlimited Distribution
Unclassified

Guiding Hard-Launched Rounds… The Epiphany!

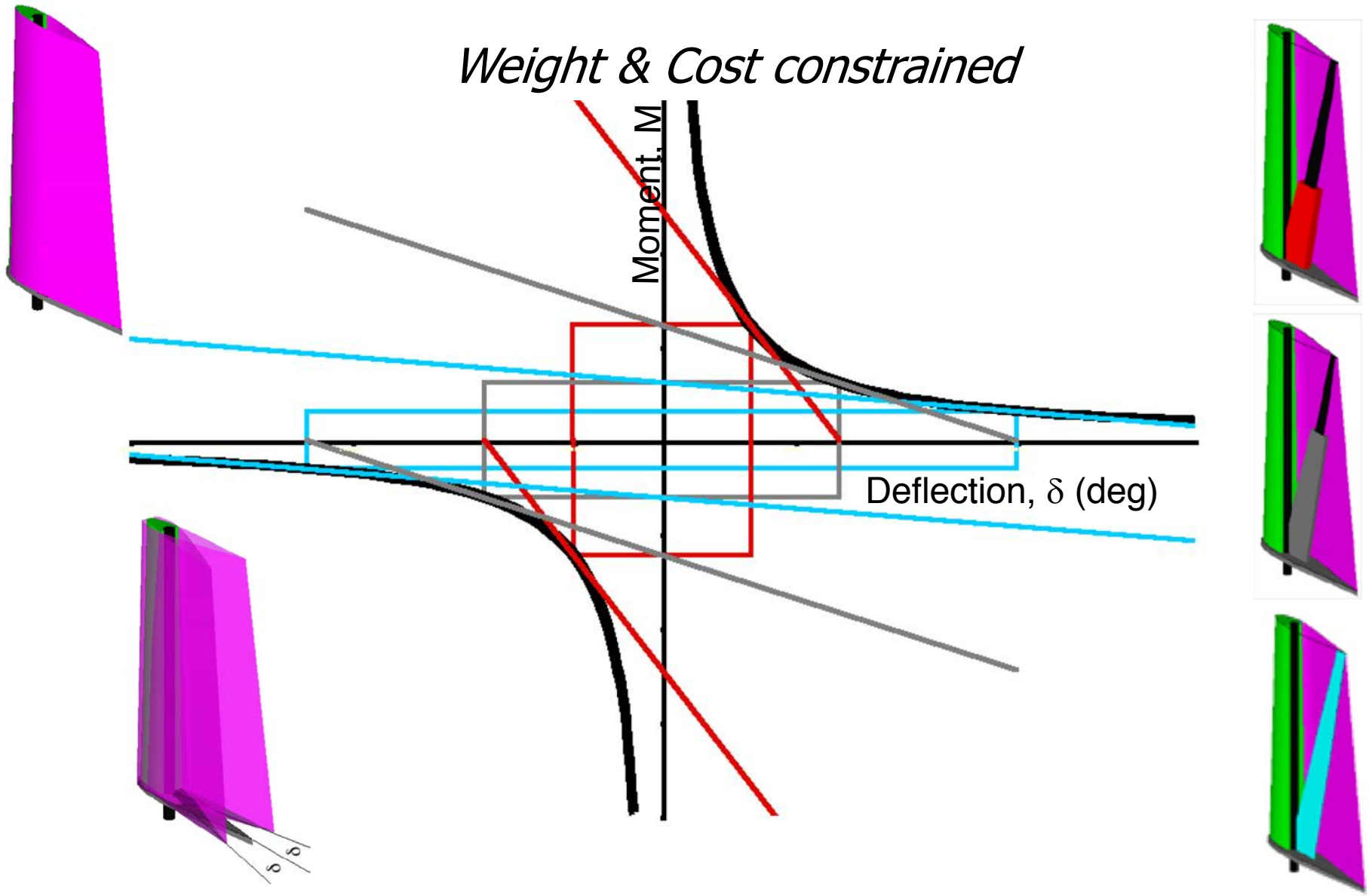

Unlimited Distribution
Unclassified

Guiding Hard-Launched Rounds… The Epiphany!

Weight & Cost constrained

single-crystals

interdigitated electrode

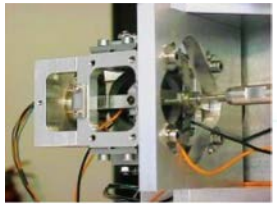

hydraulic amplifiers

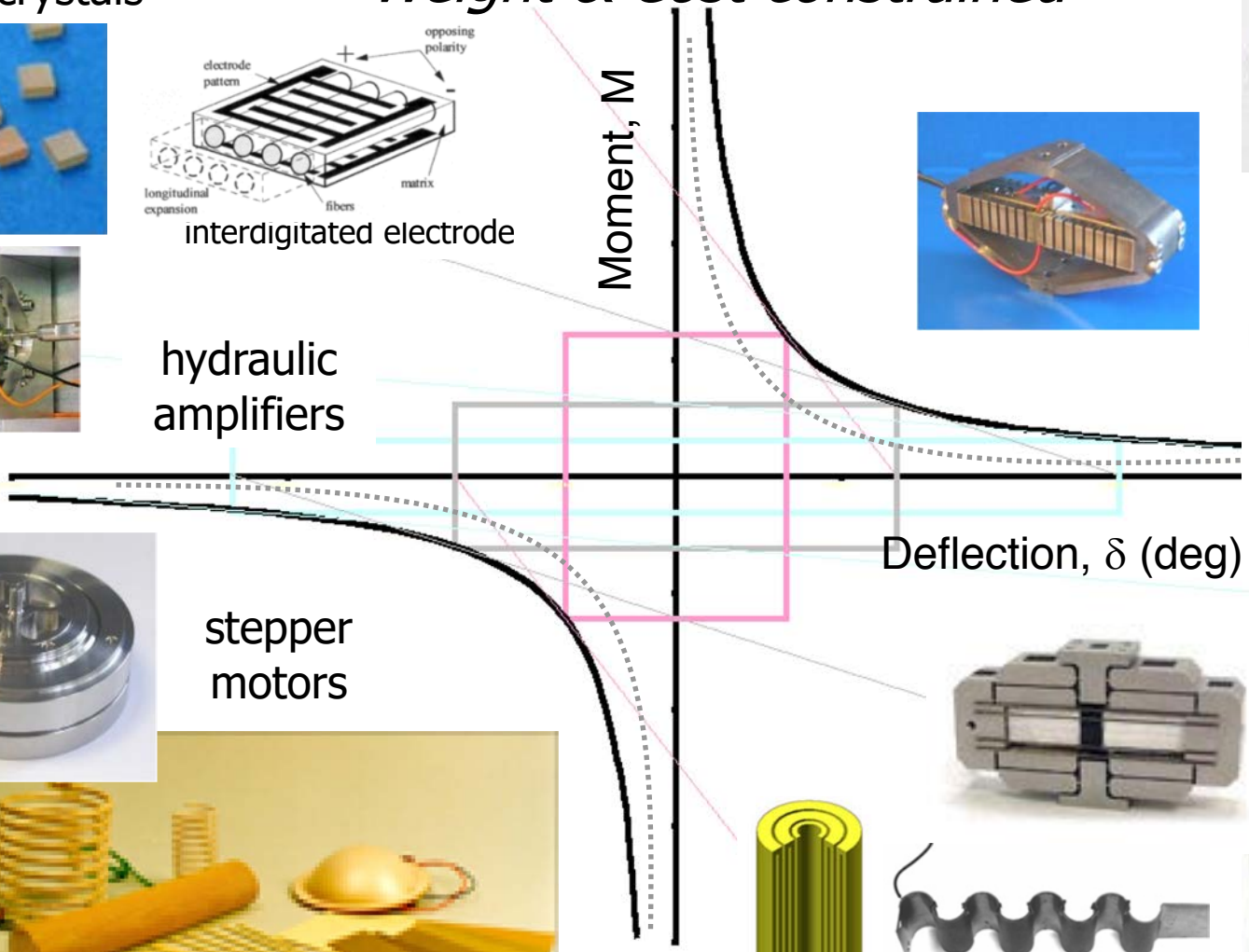

33-actuation

stepper motors

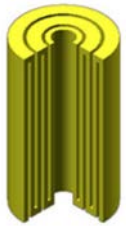

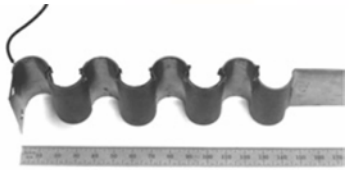

unusual element configurations

Unlimited Distribution
Unclassified

Guiding Hard-Launched Rounds… The Epiphany!

Increasing Moment-Deflection Design Space

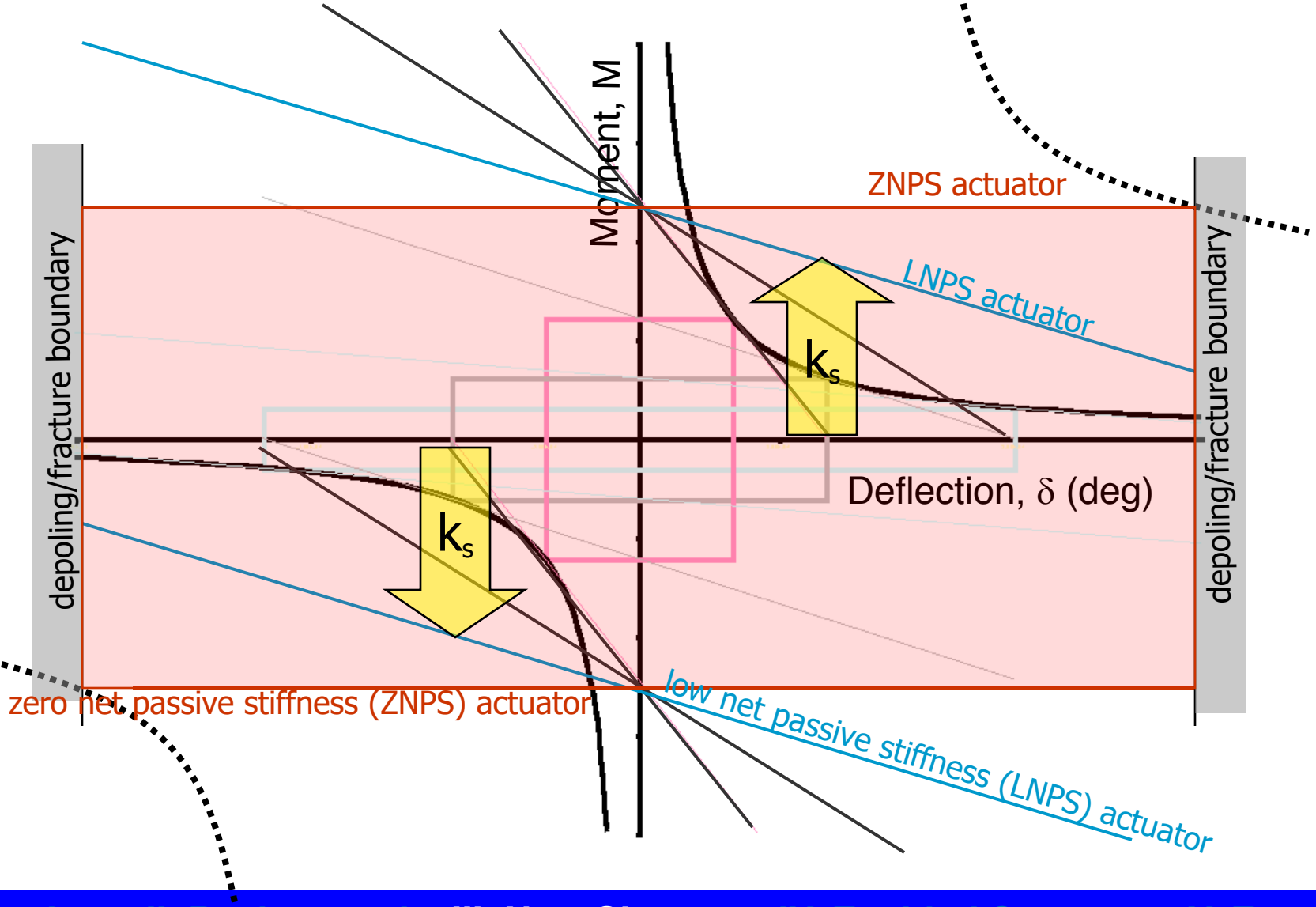

Unlimited Distribution

Unclassified

Guiding Hard-Launched Rounds… The Epiphany!

Increasing Moment-Deflection Design Space

The Limiter: Strain on Convex Face

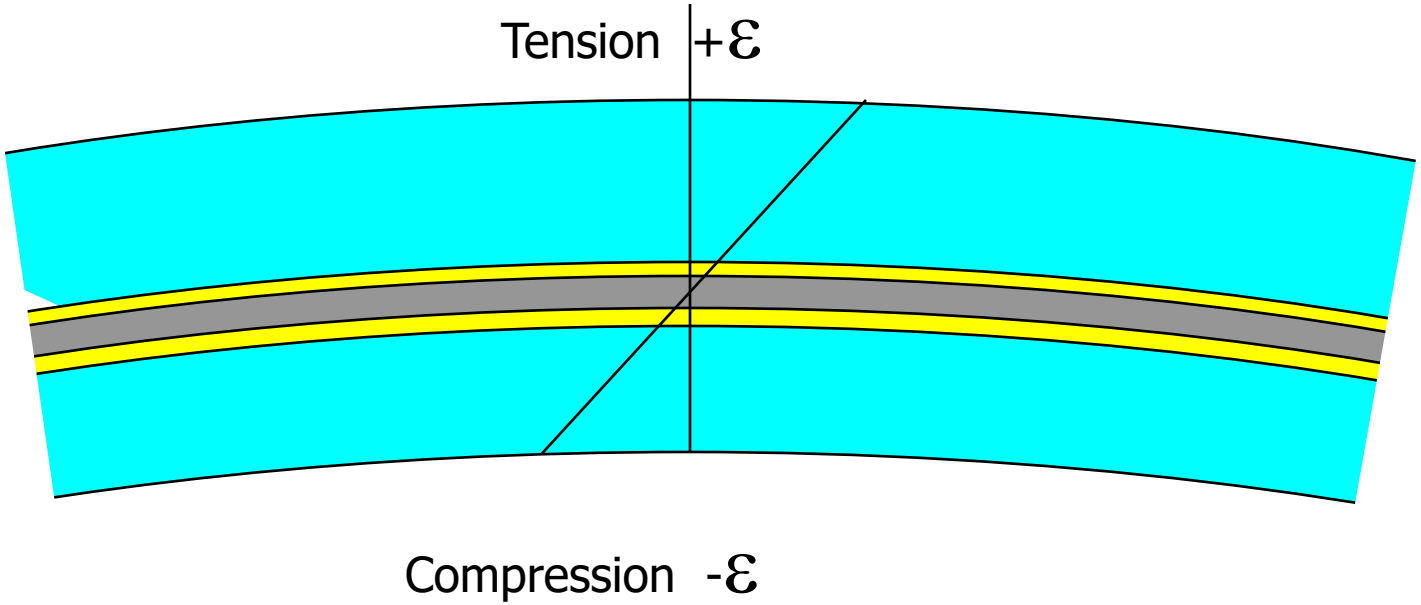

Unlimited Distribution
Unclassified

Guiding Hard-Launched Rounds… The Epiphany!

Increasing Moment-Deflection Design Space

Improvement: Precompression via CTE mismatch cure

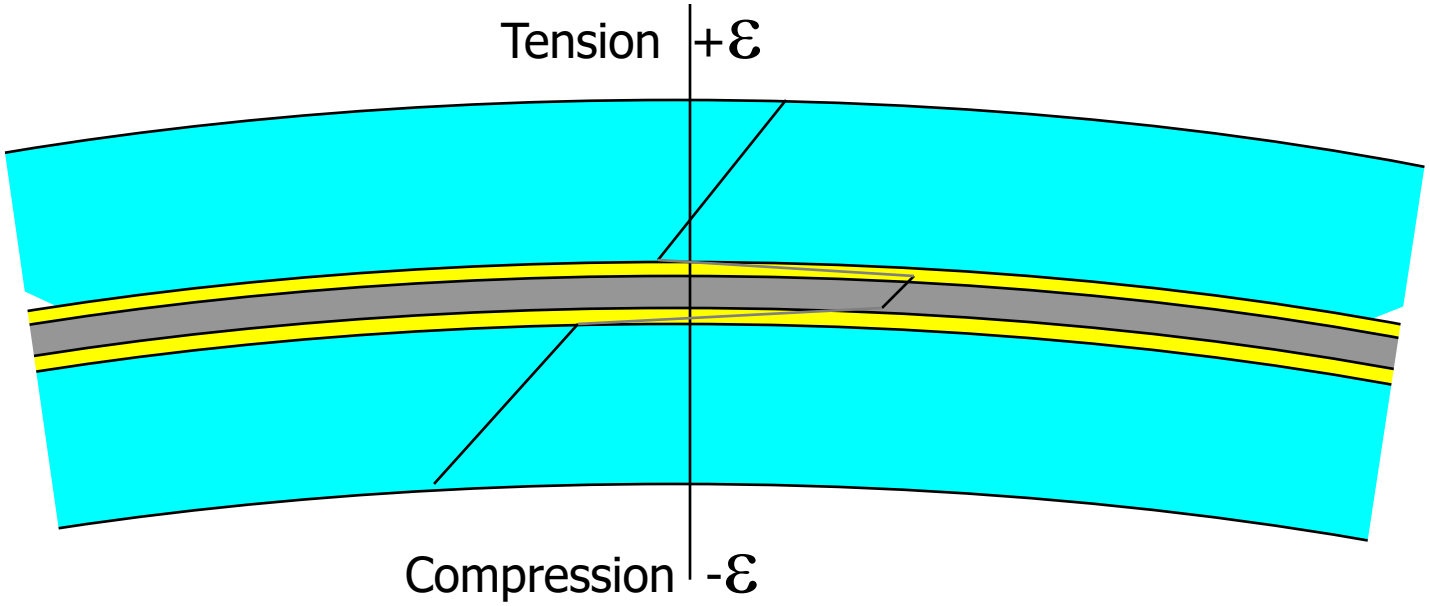

Unlimited Distribution
Unclassified

Guiding Hard-Launched Rounds… The Epiphany!

- Require bump-stops to prevent overrotation
- Depoling/fracture boundaries limit deflection
- High in-plane tensile stresses on convex face leads to premature depoling under cyclical loading
- Assembly and tuning is very tricky

Unlimited Distribution
Unclassified

Guiding Hard-Launched Rounds… The Epiphany!

Increasing Moment-Deflection Design Space

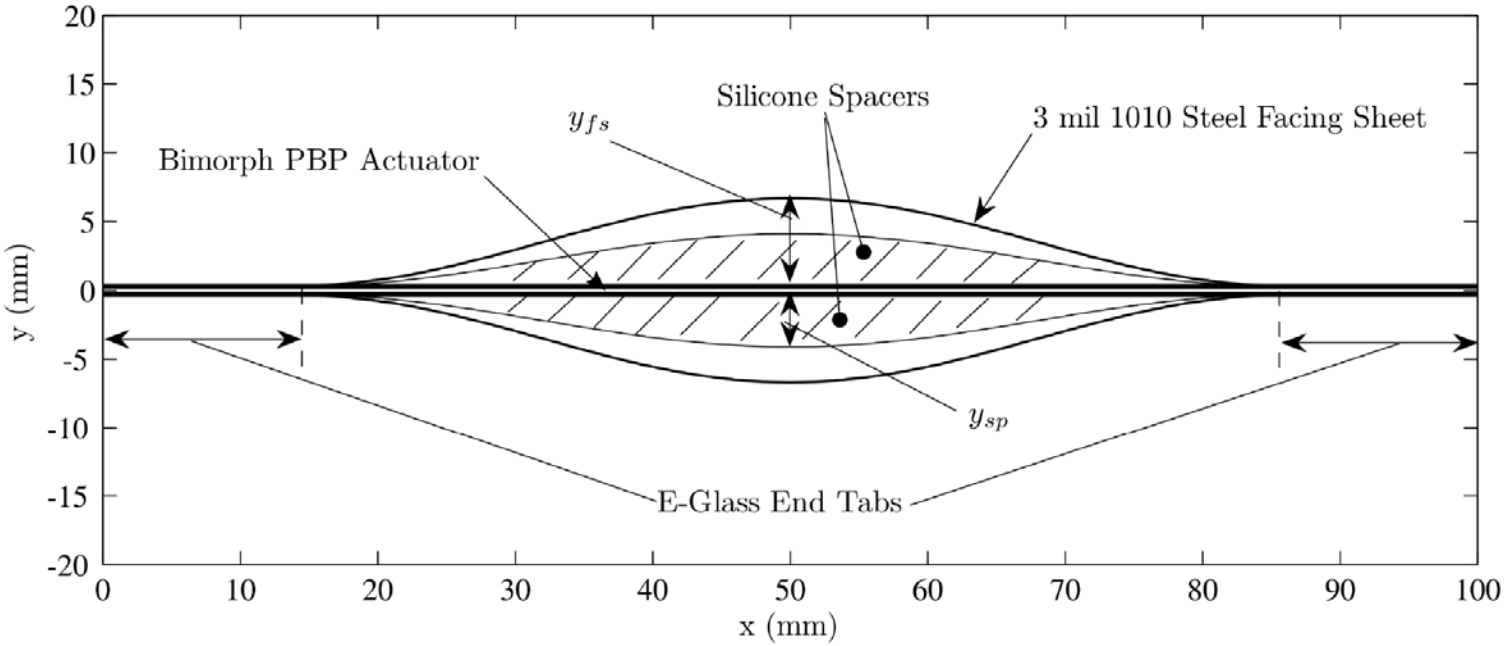

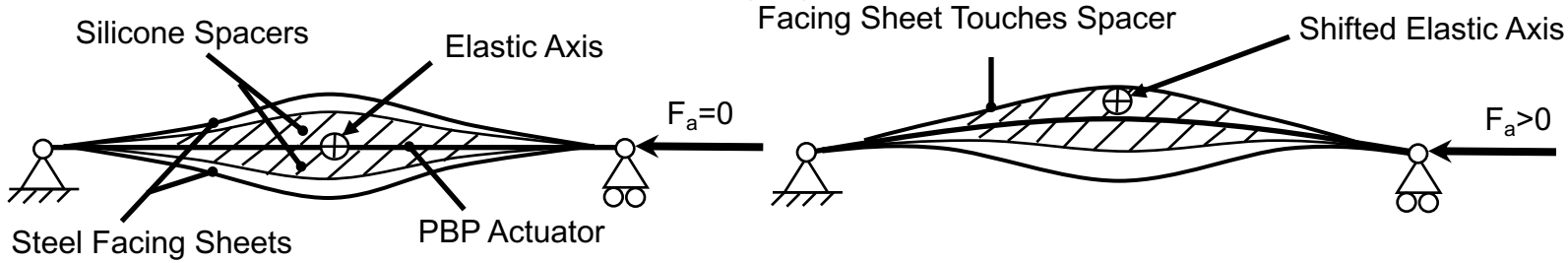

Unlimited Distribution
Unclassified

Guiding Hard-Launched Rounds… The Epiphany!

Increasing Moment-Deflection Design Space

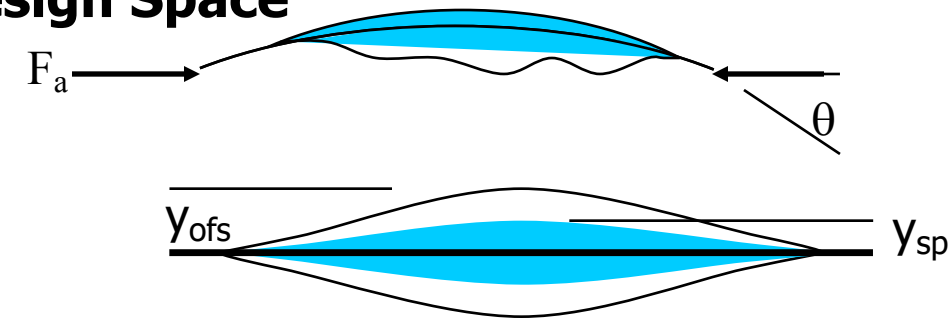

Facing sheet engagement theories

- First order model: *assumption: $y_{sp} = y_{fs}$*

$$\tan\theta = \frac{4}{L_{sp}}(y_{0fs} - y_{sp}) \tag{5}$$

- Higher Fidelity model:

assumption: $L_{sp} = L_{fs}$

$$L_{fs} = \int_0^{L_{sp}} \sqrt{1 + \left(\frac{dy_{fs}(x)}{dx}\right)^2}\, dx = \int_0^{L_{sp}} \sqrt{1 + \left(\frac{y_{0fs}\pi}{L_{sp}} \sin\left(\frac{2\pi x}{L_{sp}}\right)\right)^2}\, dx \tag{6}$$

$$L_{fs} = \int_0^{L_{sp}} \sqrt{1 + \left(\frac{dy_{sp}(x)}{dx}\right)^2}\, dx = \int_0^{L_{sp}} \sqrt{1 + \left(\frac{y_{0sp}\pi}{L_{sp}} \sin\left(\frac{2\pi x}{L_{sp}}\right) + \left(1 - \frac{2x}{L_{sp}}\right)\tan\theta\right)^2}\, dx \tag{8}$$

Equating (6) and (8) allows solution for θ

Unlimited Distribution
Unclassified

Guiding Hard-Launched Rounds… The Epiphany!

Increasing Moment-Deflection Design Space

- 2mm wide, 69μm graphite-epoxy facing strips
- 1.7mm thick silicone spacer
- Spacer, y_{sp}=1.75mm

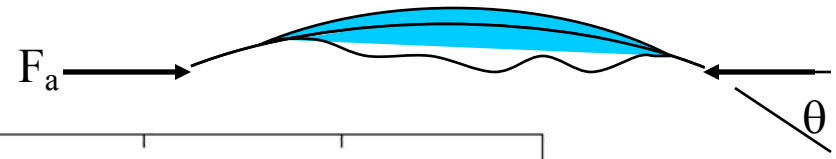

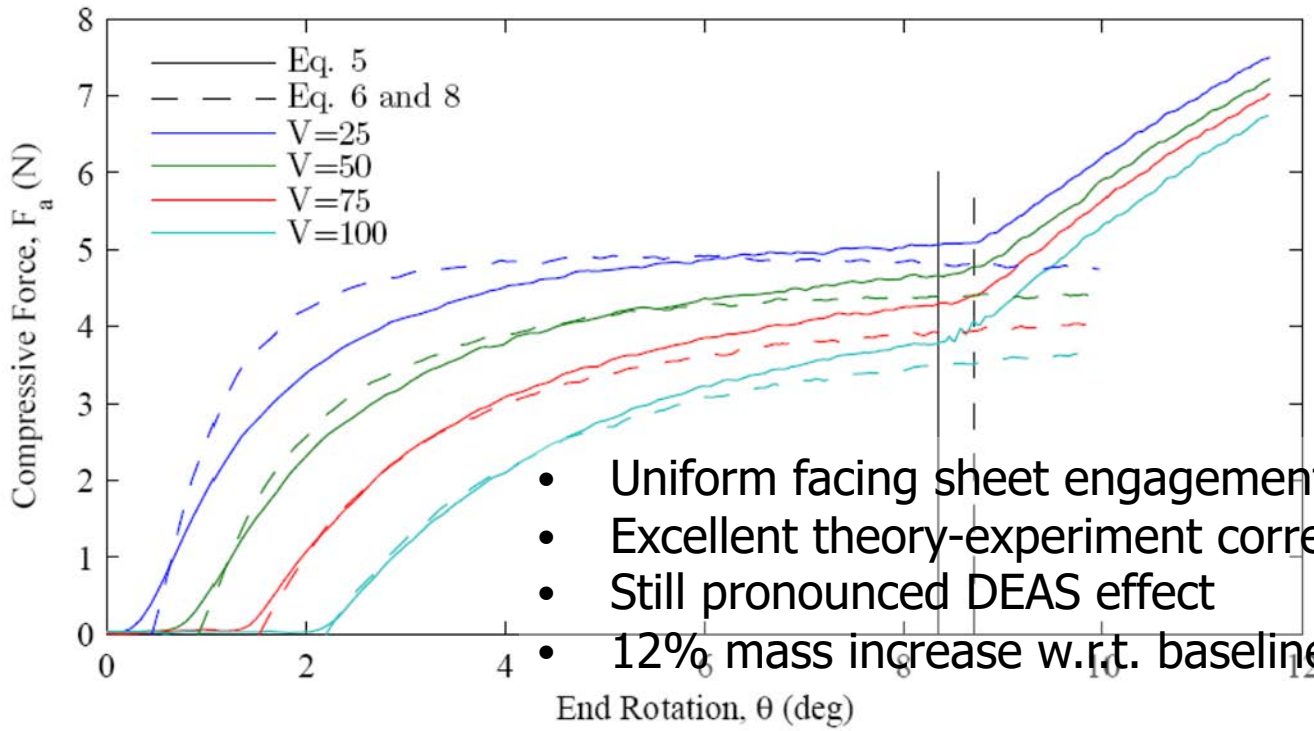

- Uniform facing sheet engagement
- Excellent theory-experiment correlation
- Still pronounced DEAS effect
- 12% mass increase w.r.t. baseline PBP element

$$\sqrt{\frac{F_a}{Db}}\int_0^{\frac{L}{2}} ds = \frac{L}{2}\sqrt{\frac{F_a}{Db}} = \int_0^{\frac{\pi}{2}} \frac{\sin\left(\frac{\theta}{2}\right)\cos\xi}{\left(\sqrt{\sin^2\left(\frac{\theta}{2}\right)\cos^2\xi + \frac{\kappa^2 Db}{4F_a}}\right)\left(\sqrt{1-\sin^2\left(\frac{\theta}{2}\right)\sin^2\xi}\right)} d\xi, \qquad (10)$$

Unclassified Unlimited Distribution

Guiding Hard-Launched Rounds… The Epiphany!

Increasing Moment-Deflection Design Space

Proper Dynamic Elastic Axis Shifting DEAS Design:

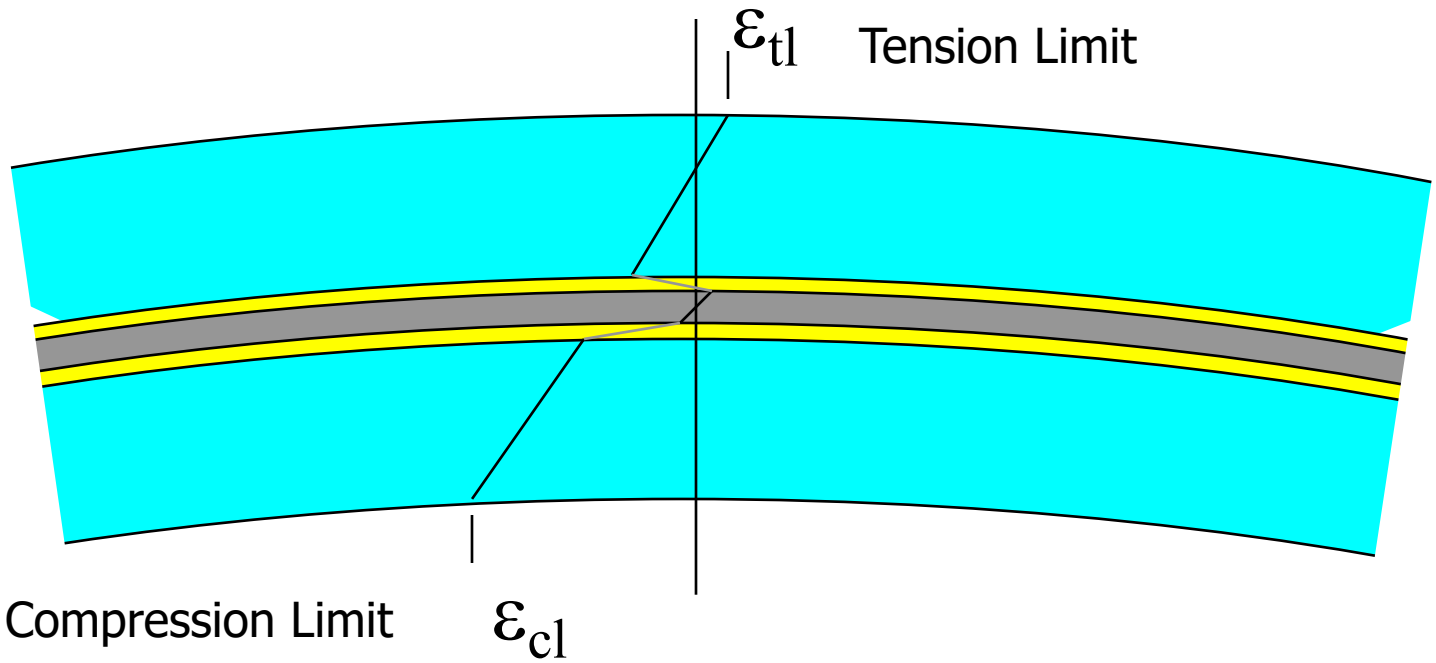

- Tension limit reached on convex face
- Compression limit reached on concave face
- Bond shear stresses below limit

Unlimited Distribution
Unclassified

PBP Actuators: The FCS Solution

- Fraction of the weight, size & power consumption of conventional Actuators (i.e. much smaller actuator bays)
- 300+% deflection increases with full force/moment capabilities
- Mass production compatible
- ±0.01 deg. trimmable
- Extremely high bandwidth
- Lower g-sensitivity
- Very low cost

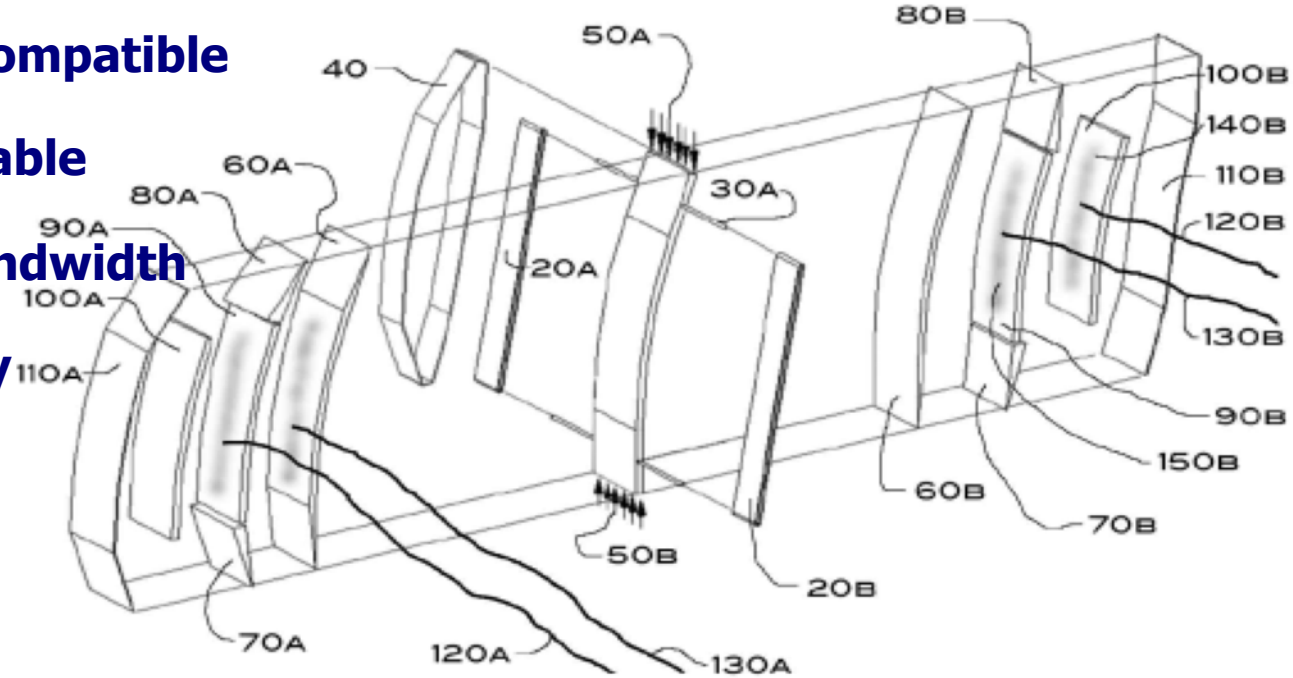

Unlimited Distribution
Unclassified

PBP Actuators: Assemblies

Assembled Hard-Launch Capable Actuator FCS Units:

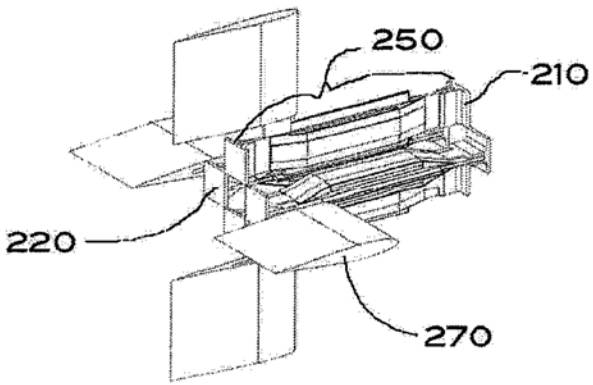

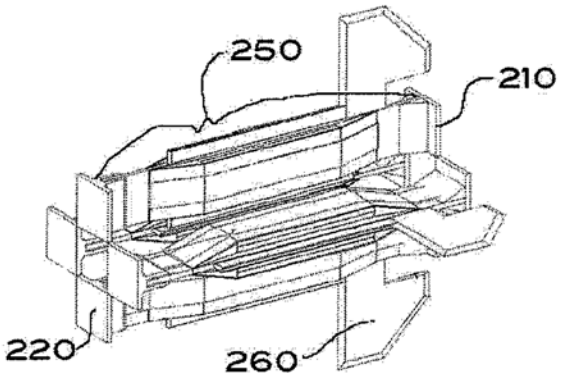

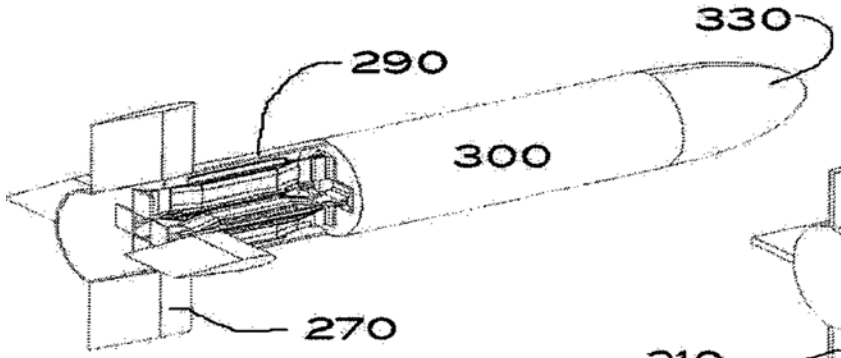

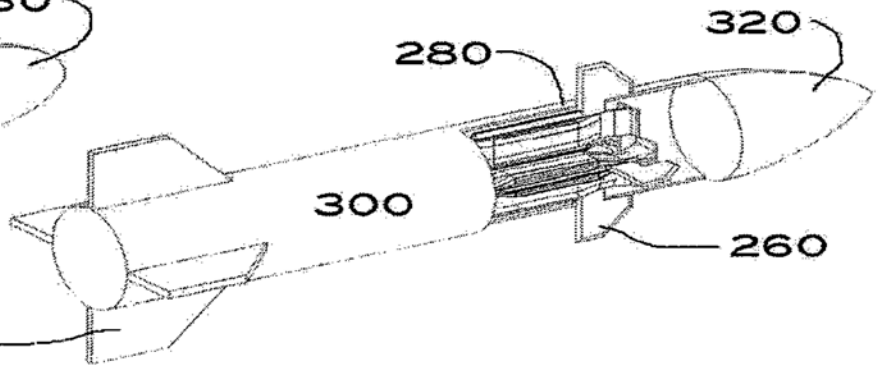

US Pat issued March 2011 *Multiple Licensees*

Unlimited Distribution

Unclassified

PBP Actuators: Fastest around…

Best performance in the adaptive structures industry:

- **1kHz equivalent bandwidth**
- **Driving 0.40/.50 cal Mach 4.5 canards**

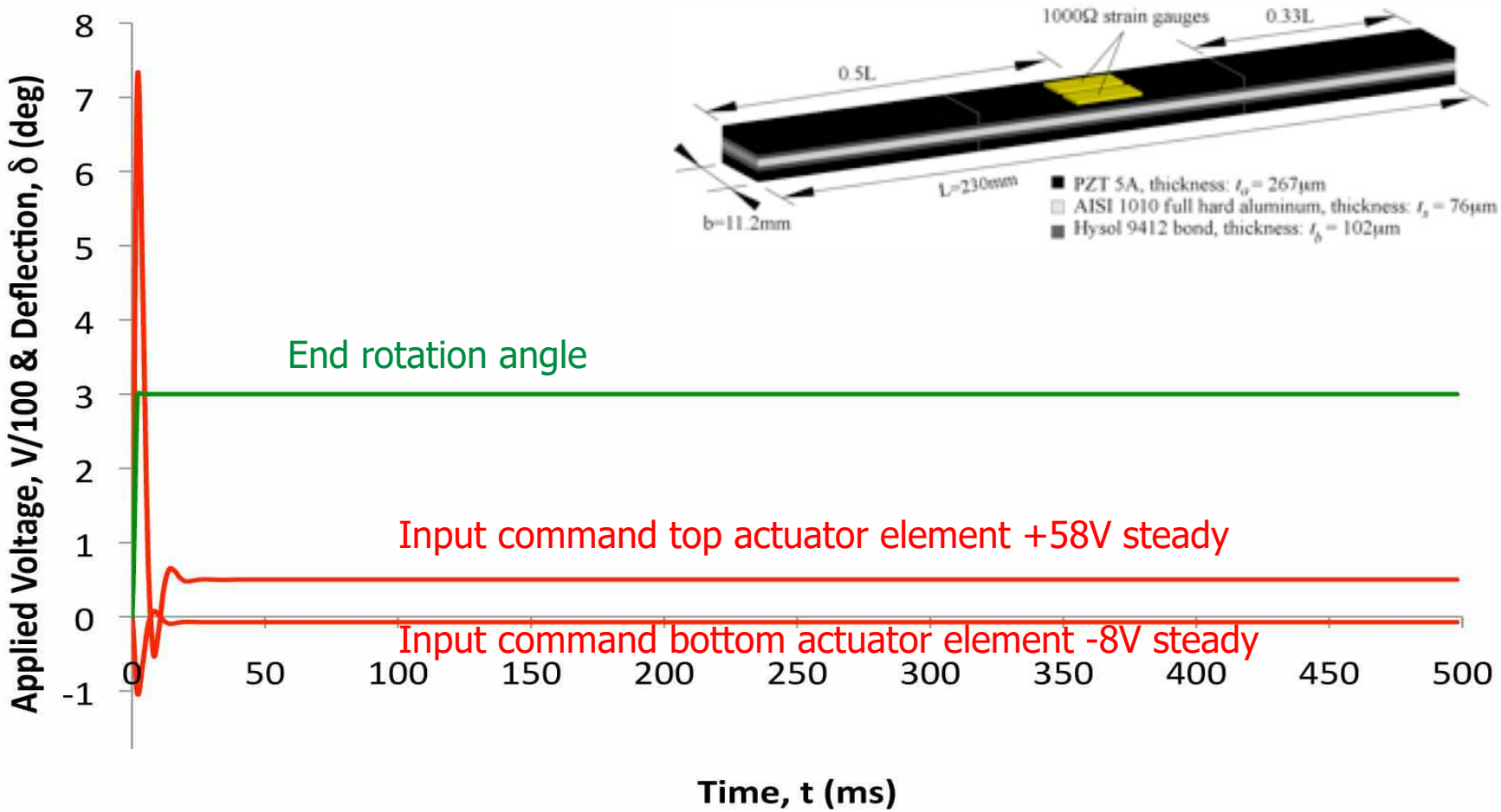

Unlimited Distribution
Unclassified

PBP Actuators: Munitions Comparisons

Smaller, Lighter, Less Expensive, More Rugged…

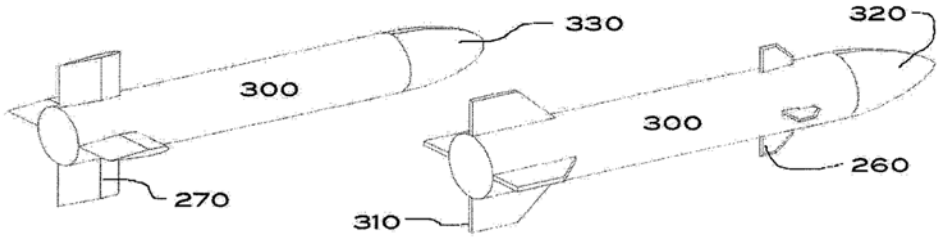

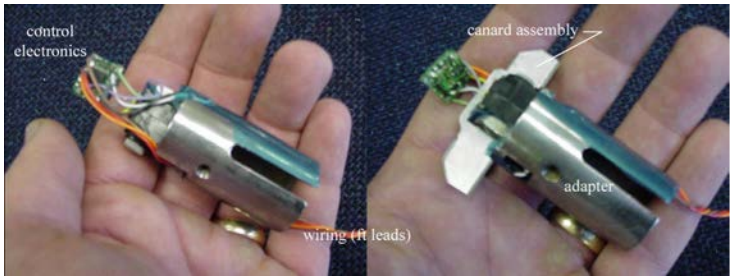

	Conventional Electromagnetic FCS	Adaptive/PBP FCS
Volume	14cc	5.1cc
Mass	69g	4.2g
Peak Power	148W	2.6W
Deadband/Slop	±0.38°	±0.002°
Bandwidth	22 Hz	189Hz
Acquisition Cost (100,000 shipsets)	$187 ea.	$12.30

Unlimited Distribution
Unclassified

New Enabled Missions:

Conventional Air-to-Air Missile Replacement

-Airframe Shrinkage

-Force Multiplication

-Counter-Missile

-Self Defense

-LO Enhancement

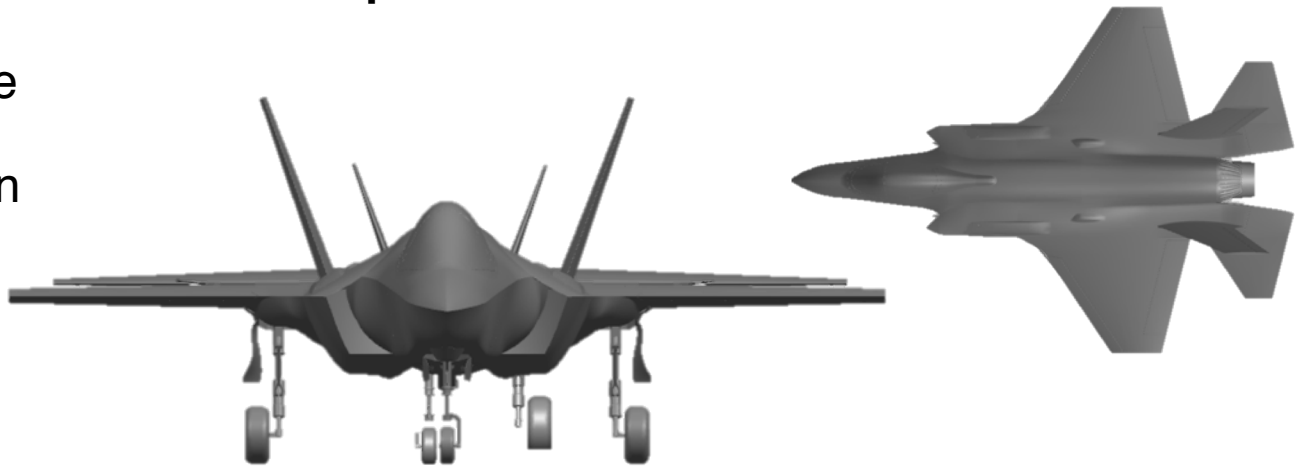

Unlimited Distribution
Unclassified

New Enabled Missions:

Enhanced Aerial Gunnery Capabilities

-30mm GAU-8/PGU-14 E_{Impact} ⟷ 25mm MASS Guided Hard-Launch Munition

-25mm GAU-22/PGU-47 E_{Impact} ⟷ 20mm MASS Guided Hard-Launch Munition

-20mm M61A1/PGU28 E_{Impact} ⟷ 16mm MASS Guided Hard-Launch Munition

Unlimited Distribution

Unclassified

New Enabled Missions:

FAC-130...

Air-to-Air...

Indirect Fire Support

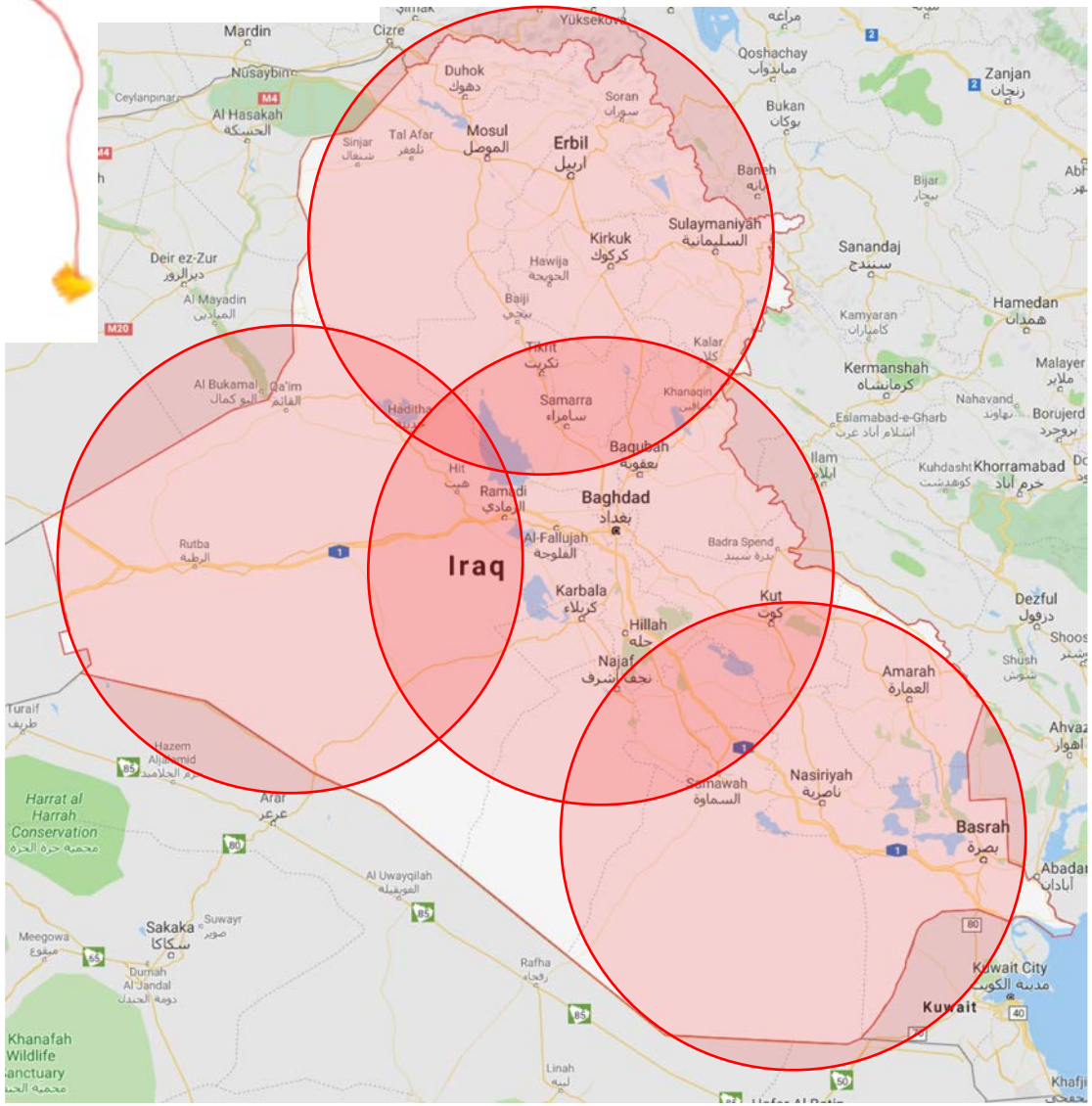

Unlimited Distribution

Unclassified

New Enabled Missions:

FAC-17

Indirect Fire Support...

Air-to-Air &

Self-defense

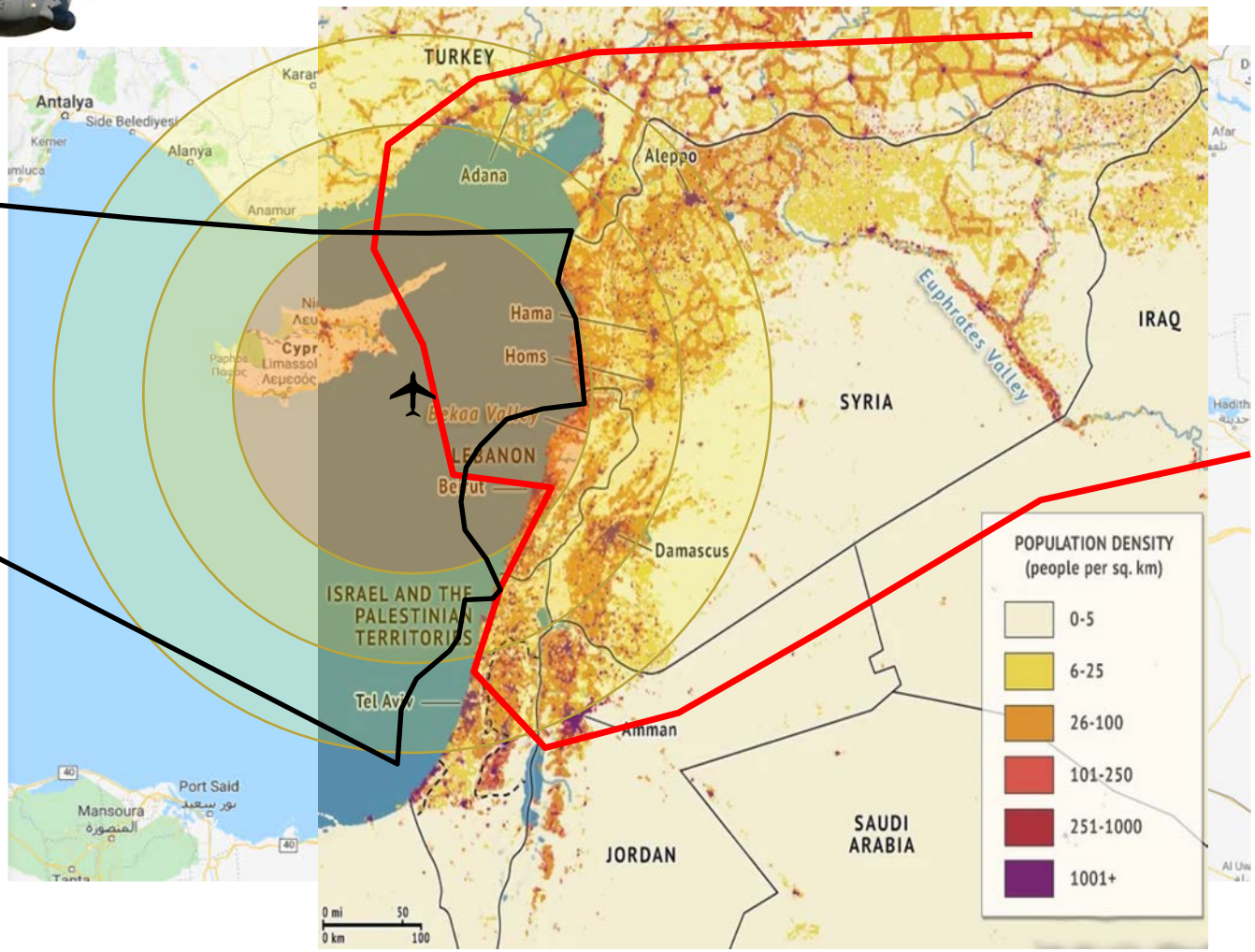

Unclassified Unlimited Distribution

Questions?

Unlimited Distribution
Unclassified